HELM Modular.Concept 80 and 140
Two sliding door systems for a wide range of applications

Sliding hardware

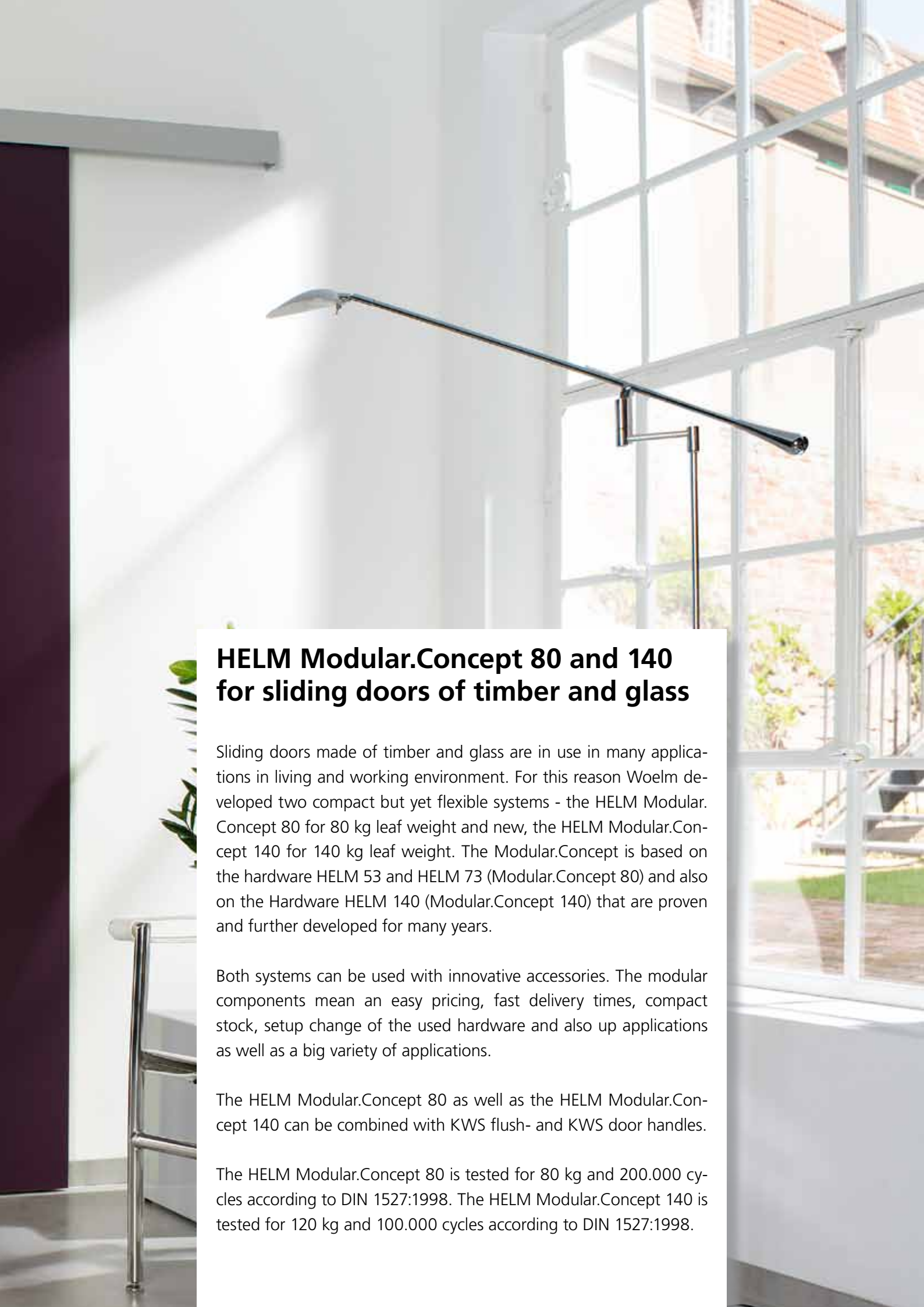

HELM Modular.Concept 80 and 140 for sliding doors of timber and glass

Sliding doors made of timber and glass are in use in many applications in living and working environment. For this reason Woelm developed two compact but yet flexible systems - the HELM Modular. Concept 80 for 80 kg leaf weight and new, the HELM Modular.Concept 140 for 140 kg leaf weight. The Modular.Concept is based on the hardware HELM 53 and HELM 73 (Modular.Concept 80) and also on the Hardware HELM 140 (Modular.Concept 140) that are proven and further developed for many years.

Both systems can be used with innovative accessories. The modular components mean an easy pricing, fast delivery times, compact stock, setup change of the used hardware and also up applications as well as a big variety of applications.

The HELM Modular.Concept 80 as well as the HELM Modular.Concept 140 can be combined with KWS flush- and KWS door handles.

The HELM Modular.Concept 80 is tested for 80 kg and 200.000 cycles according to DIN 1527:1998. The HELM Modular.Concept 140 is tested for 120 kg and 100.000 cycles according to DIN 1527:1998.

Modular.Concept 80

For timber and glass Sliding Doors

HELM 53 up to 50 kg and HELM 73 up to 80 kg leaf weight

HELM Track 60

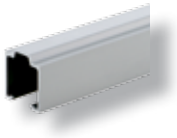

HELM accessories for timber and glass

HELM Glass flange

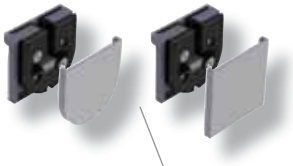

HELM Projection track

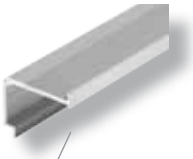

HELM Spacer profile

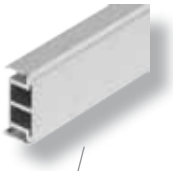

HELMatic
230 Volt drive

HELM SmartStop

HELM
Door push out

HELM
SmartClose

HELM Clip on
pelmet

KWS
Door Handles

KWS
flush handle

HELM SmartClose

HELM SmartClose is providing the autonomous and safe closure of the door. The HELM SmartClose is used in connection with the soft closing device HELM SmartStop and is suitable for timber and glass doors.

Product advantages
- autonomous and safe closure
- usable in combination with HELM SmartStop
- convenient with sliding doors of glass and timber
- complete pelmetting possible
- easy installation with extension of the track

HELM SmartStop 53/73

We set an end to sliding leaves that close noisily and bounce back. Thanks to our SmartStop (HELM 53/73) for the use on one or both sides we stop each door and pull it noiselessly into the final position.

This HELM SmartStop makes sure that closed leafs remain closed.

Product advantages
- door is slowed down towards the stop positions and pulled into the final position.
- quiet and comfortable closing
- slowing down can be effected on one or both sides
- mounting in the track profile
- employed air cylinder is maintenance-free
- door is held in the stop positions, thus an additional door catcher is not required

HELM 53

up to 30 kg leaf weight

up to 50 kg leaf weight

HELM 73

tested according to
DIN 1527:1998
200.000 cycles

up to 80 kg leaf weight

HELM Glass flange

For the first time this HELM glass flange allows the use of laminated safety glass as well as tempered safety glass. The glass flange is fastened by a drilling in the glass. An optical highlight are the new round and square caps, which only cover the flange and are used instead of a clip on pelmet.

Product advantages
- for tempered (TSG) and laminated safety glass (LSG)
- for glass sliding doors with a thickness of 8 up to 10,76 mm and 12 up to 12,76 mm
- Plastic enameled in colour of silver anodised and stainless steel finish anodised

Cover caps squere

Cover caps rounded

Modular.Concept 80 – HELM 53 / HELM 73

Hardware for Sliding doors made of timber, wall mounting

Modular.Concept 80 - HELM 73 (HELM 53) Timber, wall mounting with lateral drilled holes, spacer profile and clip on pelmet

Modular.Concept 80 – HELM 53 / HELM 73

Hardware for Sliding doors made of timber, wall mounting

Modular.Concept 80 - HELM 73 (HELM 53) Timber, wall mounting with lateral drilled holes, spacer profile and timber pelmet

Modular.Concept 80 – HELM 73

Hardware for Sliding doors made of timber, wall mounting, synchronised

Modular.Concept 80 - HELM 73 Timber, wall mounting with lateral drilled holes, spacer profile and clip on pelmet, synchronised

Modular.Concept 80 – HELM 53 / HELM 73

Hardware for Sliding doors made of timber, wall pocket mounting

Modular.Concept 80 - HELM 73 (HELM 53) Timber, pocket door installation

Modular.Concept 80 – HELM 53 / HELM 73

Hardware for Sliding doors made of timber, wall mounting, low headroom installation

Modular.Concept 80 - HELM 73 ME Timber, wall mounting with projection track and low headroom installation

Modular.Concept 80 – HELM 73

Hardware for Sliding doors made of glass, wall mounting, synchronised

Modular.Concept 80 - HELM 73 Glass, wall mounting with lateral drilled holes, spacer profile and clip on pelmet, synchronised

Modular.Concept 80 – HELM 73

Hardware for Sliding doors made of glass, ceiling mounting, with glass flange

Modular.Concept 80 - HELM 73 (HELM 53) Glass, wall mounting with lateral drilled holes and clip on pelmet

Modular.Concept 80
Accessories

HELM SmartClose

HELM SmartStop 53/73

HELM 53

up to 30 kg leaf weight

up to 50 kg leaf weight

HELM 73

tested according to
DIN 1527:1998
200.000 cycles

up to 80 kg leaf weight

HELM Door push out
for pocket door installation

Clip on pelmet
for Sliding doors made of timber

Clip on pelmet
for Sliding doors made of glass

HELM holding fixture
for side panel

Pelmet for glass door clamps

HELM Glass flange, round (TSG/LSG)

HELM Glass flange, square (TSG/LSG)

KWS flush handle 5251
for timber doors

KWS flush handle 5250
for glass doors

KWS flush handle 5260
for glass doors

Further accessories are available from our Catalogue TEH_02G and TEH_02H

Modular.Concept 140

For timber and glass Sliding Doors
HELM 140 up to 140 kg

HELM Track 140

HELM accessories for timber and glass

HELM Glass door clamp

HELM Flange for low headroom installation

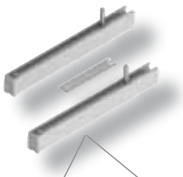

HELM Spacer profile

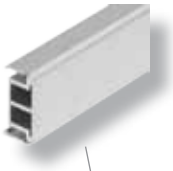

HELMatic 230 Volt drive

HELM SmartStop

HELM holding fixture

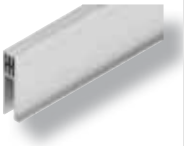

HELM SmartClose

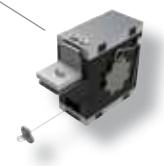

HELM Clip on pelmet

KWS Door Handles

KWS flush handles

HELM SmartClose

HELM SmartClose is providing the autonomous and safe closure of the door. The HELM SmartClose is used in connection with the soft closing device HELM SmartStop and is suitable for timber and glass doors.

Product advantages
- autonomous and safe closure
- usable in combination with HELM SmartStop
- convenient with sliding doors of glass and timber
- complete pelmetting
- easy installation

HELM SmartStop 140

We set an end to sliding leaves that close noisily and bounce back. Thanks to our SmartStop (HELM 140) for the use on one or both sides we stop each door and pull it noiselessly into the final position.

This HELM SmartStop makes sure that closed leafs remain closed.

Product advantages
- door is slowed down towards the stop positions and pulled into the final position.
- quiet and comfortable closing
- slowing down can be effected on one or both sides
- mounting in the track profile
- employed air cylinder is maintenance-free
- door is held in the stop positions, thus an additional door catcher is not required

HELM 140

up to 140 kg leaf weight

HELM 140 ME (low headroom installation)

HELM 140 ME is used for ceiling height sliding doors (eg as a room divider). The advantage of this hardware design is the very low installation height, which is achieved by the inlet in the sliding leaf suspension.

Product advantages
- easy installation
- high quality product
- pelmetting not required

Modular.Concept 140 – HELM 140

Hardware for Sliding doors made of glass, ceiling mounting, with side panel

Modular.Concept 140 – HELM 140

Hardware for Sliding doors made of timber, wall mounting

Modular.Concept 140 - HELM 140, wall mounting with lateral drilled holes, spacer profile and clip on pelmet

Modular.Concept 140 – HELM 140

Hardware for Sliding doors made of glass, wall mounting

Modular.Concept 140 - HELM 140, wall mounting with lateral drilled holes and clip on pelmet

Modular.Concept 140 – HELM 140

Hardware for Sliding doors made of timber, wall mounting

Modular.Concept 140 - HELM 140, wall mounting with lateral drilled holes, spacer profile and clip on pelmet

Modular.Concept 140
Accessories

HELM SmartClose

HELM SmartStop 140,
up to 140 kg leaf weight

Pelmet for glass door clamps

Clip on pelmet,
for Sliding doors made of timber

Clip on pelmet,
for Sliding doors made of glass

HELM holding fixture
for side panel

HELM Flange ME,
low headroom installation

KWS flush handle 5251
for timber doors

KWS flush handle 5252
for glass doors

KWS Door Handle 8525
for glass- and timber doors

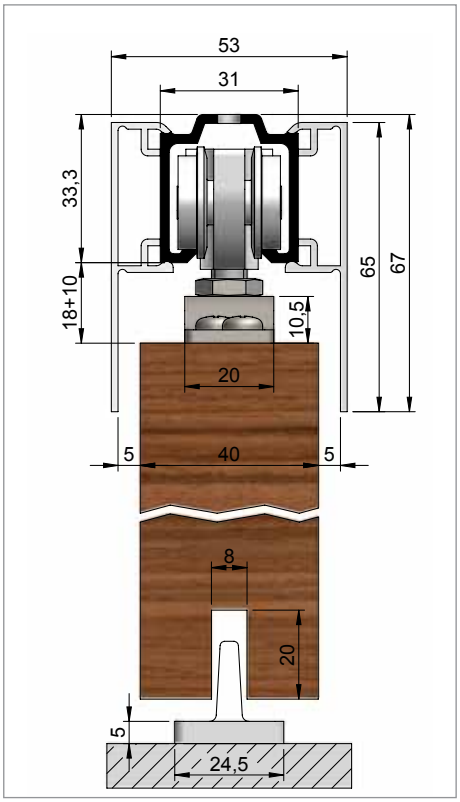

HELM 73 – Ceiling mounting, with double sided pelmetting

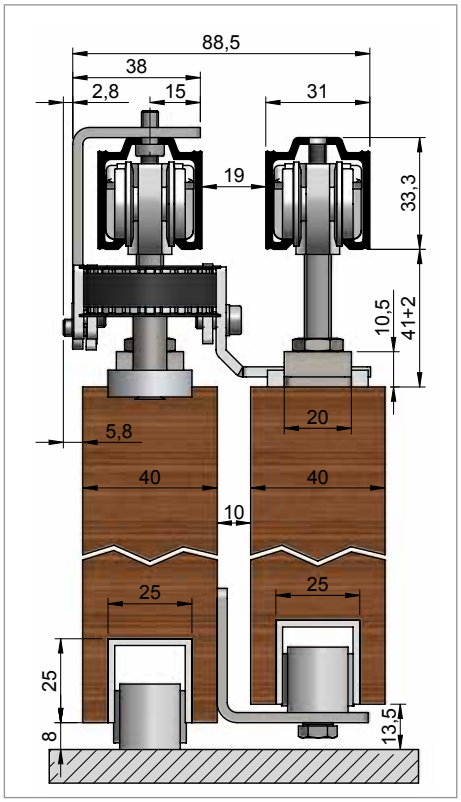

HELM 73 – Telescopic hardware, double leaf, ceiling mounting

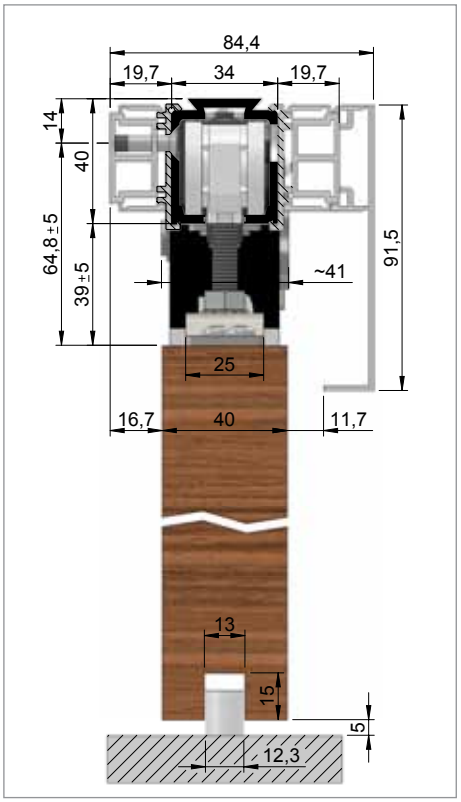

HELM 140 – Wall mounting, track with drilled holes on the side, two-sided spacer profile and one-sided pelmetting with HELM SmartClose and HELM SmartStop

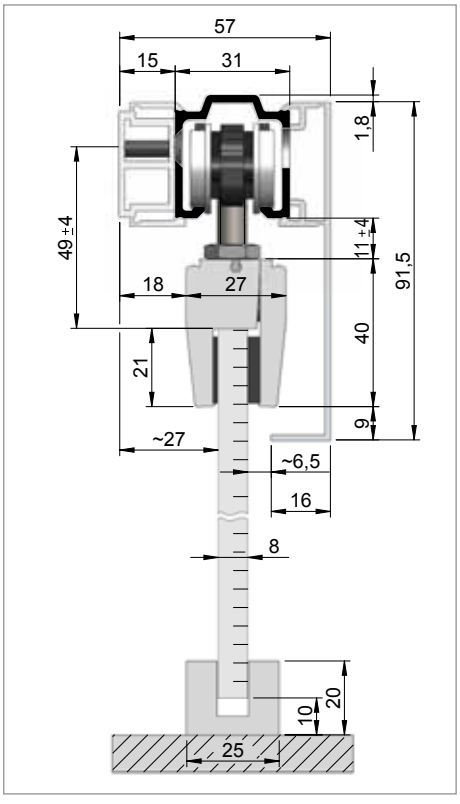

HELM 53 – Wall mounting, track with drilled holes on the side, spacer profile and pelmetting

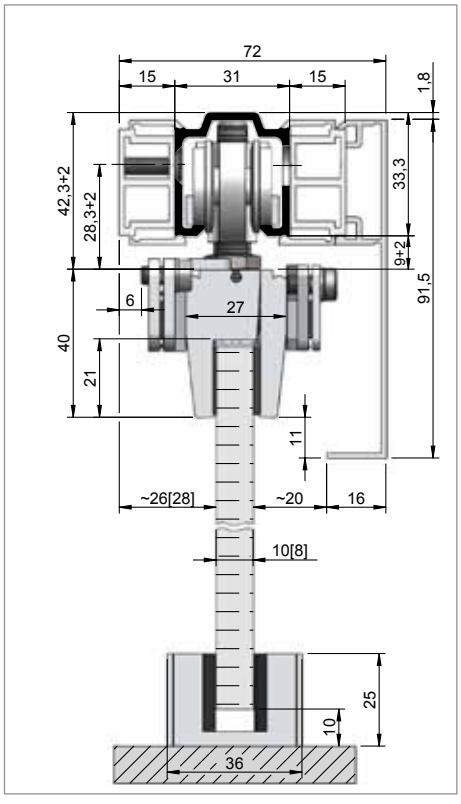

HELM 73 – Wall mounting, track with drilled holes on the side, spacer profile and one-sided pelmetting, synchronised

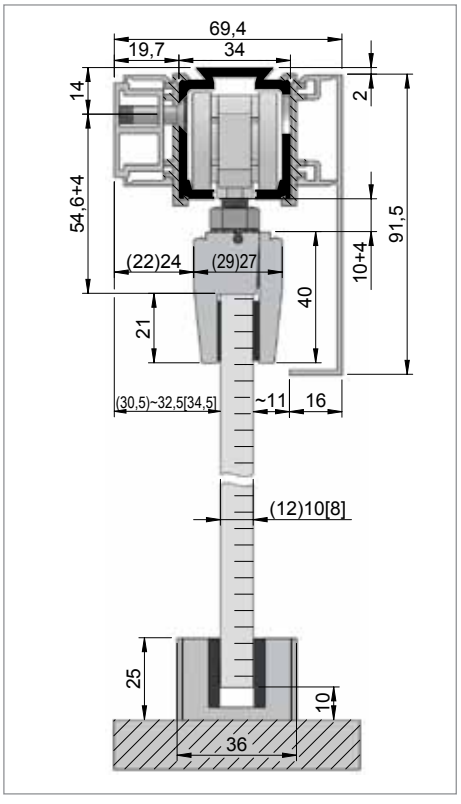

HELM 140 – Wall mounting, track with drilled holes on the side, spacer profile and pelmetting

HELM Modular.Concept
Enquiry Form

Required information

☐ **Order** ☐ **Enquire** **Date** _____

Company _____ Telephone _____

Name _____ Fax _____

Street _____ E-Mail _____

Postcode/city _____ Contact person _____

Supply exclusively through specialised trade. Please indicate your specialist dealer if appropriate: _____

Information Sliding door:

Door dimensions: Height _____mm Width _____mm Thickness _____mm
Weight _____kg

Material: ☐ Glass TSG ☐ Glass LSG ☐ Timber

Number of leafs ☐ single leaf ☐ double leaf ☐ triple leaf
☐ Telescopic ☐ Synchronised ☐ with sidepanel width _____mm

Installation ☐ ceiling mounting ☐ wall mounting
☐ wall pocket mounting
☐ Projecktion track ☐ for low headroom installation
☐ for pelmetting

Surface ☐ natural finish ☐ silver anodised ☐ stainless-steel finish anodised

Pelmeting ☐ one sided ☐ double sided ☐ provided by the customer

Accessories ☐ HELM Smart Stop: ☐ one sided ☐ double sided
☐ HELM Smart Close
☐ Flange (low headroom installation)
☐ glass flange: ☐ round ☐ square
☐ pelmeting glass door clamps
☐ door push out (only modular.Concept 80)

KWS door pulls:

Flush pulls ☐ KWS 5250 ☐ KWS 5260 ☐ KWS 5252 ☐ other _____

Door pulls ☐ KWS 8170 ☐ KWS 8179 ☐ KWS 8525

Material ☐ stainless-steel ☐ aluminium ☐ brass

Surface ☐ natural finished ☐ brushed ☐ polished

Assets _____

Woelm GmbH | Hasselbecker Str. 2-4 | D-42579 Heiligenhaus | Tel.: +49 (0) 20 56 - 18 - 0 | Fax: +49 (0) 20 56 - 18 - 21
Woelm Austria GmbH | Seewalchen 5a | A-5201 Seekirchen | Tel.: +43 (0) 62 12 - 25 - 02 | Fax: +43 (0) 62 12 - 69 - 95

HELM Range

TEH_01	Hardware for Sliding Wardrobe Doors
TEH_02H	Hardware for Sliding Doors (Timber)
TEH_02G	Hardware for Sliding Doors (Glass)
TEH_02D	Design Hardware for Sliding Doors (Timber and Glass)
TEH_06	Hardware for Sliding Gates
TEH_09	Hardware for Gateway Gates
TEH_11	Hardware for Curtains and Tarpaulins
TEH_12	Safety Equipment against Falls from a Height (PSE)
TEH_40	Hardware for Sliding Shutters

KWS Range

TEK_0102	Door Holders and Door Stops
TEK_0308	Pull Handles, Door Handles and Accessories
TEK_0506	Flush Handles and Locks
TEK_0407	Hardware for Handrails, Floor Rails, Coat Racks and Toilet Partition Walls

Code with link to download the brochure BEH_02MKAW

The technical specifications are up-to-date. We reserve the right to make modifications with regard to design and styling which serve the purpose of technical improvement. We appreciate your understanding that we assume no liability for any typing errors or any other errors. The reproduction of this document, in extracts or complete, is not permitted without our express written permission.

Part no.: BEH_02MKAW/03.2016
This brochure supersedes all previous brochures.

Woelm GmbH
Hasselbecker Str. 2-4
D-42579 Heiligenhaus
Tel.: +49 (0) 20 56 - 18 - 0
Fax: +49 (0) 20 56 - 18 - 21
www.woelm.de
contact@woelm.de

Woelm Austria GmbH
Seewalchen 5a
A-5201 Seekirchen
Tel.: +43 (0) 62 12 - 25 02
Fax: +43 (0) 62 12 - 69 95
www.woelm.at
contact@woelm.at